GOLDKOON

GLD3200
Water leakage controller

With broken wire alarm



The sensing cable can monitor up to 500 meters
One-button mute and automatic reset
Rail mountable, compact design
Outputs both switch signal and RS485 signal
Capable of detecting water, acid-base liquids, and oil leaks

Product Intro

The GLD3200 Liquid Leakage Controller provides real-time monitoring of environmental leaksUpon detection of a leak, thecontroller issues an alarm and transmits the leak information via an RS485 communication interface while also activating a relay to output a switch signal. The leak controller is programmed with the MODBUS-RTU protocol making it easy to integrate with monitoring systems and capable of monitoring a sensing cable up to 500 meterslong.

Technical Specifications

Power Supply Voltage	12-24VDC
Relay Output	1 SPDT 220VAC/ 10A 30VDC/ 10A
Serial Interface	RS485 two-wire network, MODBUS-RTU Baud rate (default 9600), Address (default 1)
Sensing Length	Up to 500 meters
Response Time	Response time < 3 seconds
Operating Environment	-30 to 70°C, 0-80% RH (non-condensing)
Enclosure Dimensions	70mm*85mm*58mm
Installation Method	35mm rail mounting

Product Certification

For debugging software, user instructions, or communication protocols, please contact our sales staff.

Shenzhen Goldkoon Automatic Control Equipment Co., Ltd. Phone: 0755-23776082 E-mail: gold@goldkoon.com
www.goldkoon.com

GOLDKOON

GLD3200
Water leakage controller

With broken wire alarm

Power Input (POWER)

Supports 12-24VDC supply

VCC - Power positive

GND - Power negative

RS485 Interface

RS+ connected to A

RS- connected to B

****For detailed operation, refer to the communication protocol****



Sensitivity Adjustment Knob

POWER Power Indicator (Green)

Mute Button

ALARM Leak Indicator Leak alarm (red))

SENSOR CABLE

S1 S2 connects to the sensing cable

(Lead wires are color indistinguishable)

Relay Output

NO - Normally Open

COM - Common

NC - Normally Closed

1. The leak controller can connect to a sensing cable up to 500 meters long.
2. The leak controller can automatically return to normal monitoring mode once a leak is resolved.
3. The factory default settings for the leak controller are address 01, baud rate 9600, and normal sensitivity value (parameters can be set according to on-site requirements).)

Caution:

Before powering on, please confirm the power supply voltage. Reversed power connection or excessive voltage may damage the controller.;

For debugging software, user instructions, or communication protocols, please contact our sales staff.

Shenzhen Goldkoon Automatic Control Equipment Co., Ltd. Phone: 0755-23776082 E-mail: gold@goldkoon.com
www.goldkoon.com

GOLDKOON

GLD3200
Water leakage controller

With broken wire alarm

System Application Diagram

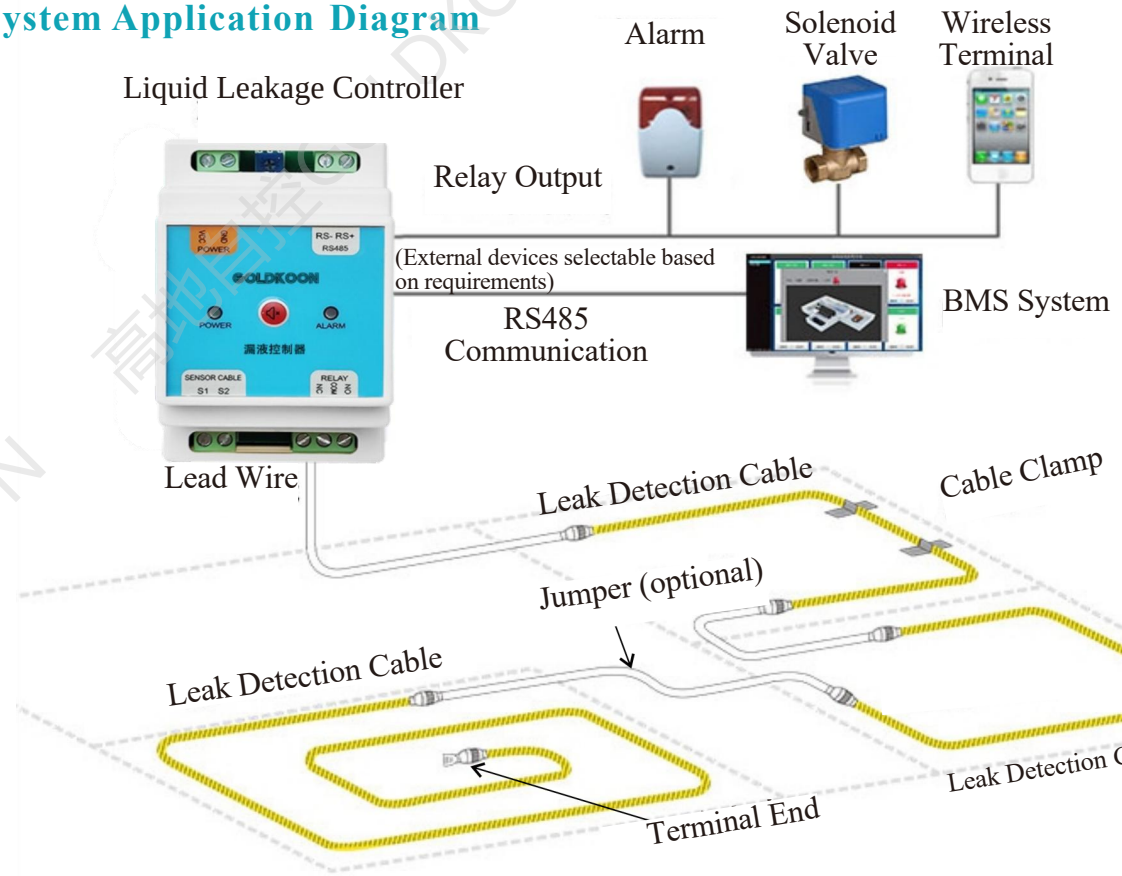

Sensing Cable Layout Diagram



Full area coverage | Coverage of peripheral areas | Coverage of equipment areas

Sensing Cable Installation Notes

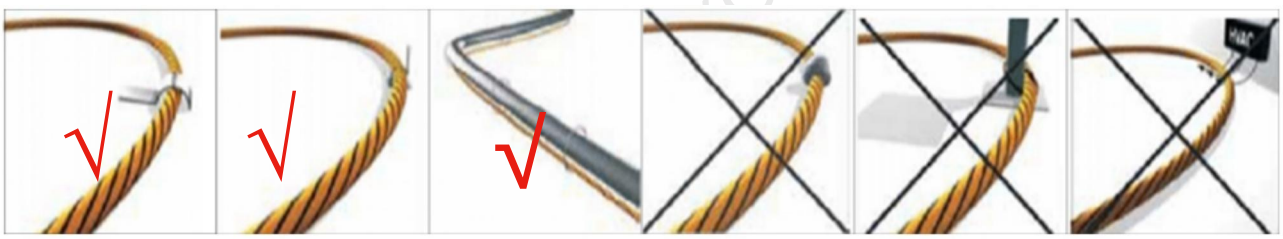

Dedicated cable clamp installation | Bundle seat fixation | Along-pipe suspension | Glue fixation | Bundling with metal | Align with air conditioner vents

For debugging software, user instructions, or communication protocols, please contact our sales staff.

Shenzhen Goldkoon Automatic Control Equipment Co., Ltd. Phone: 0755-23776082 E-mail: gold@goldkoon.com
www.goldkoon.com